| REV. | ECN NO | LOCATIONS | DESCRIPTION | DATE |
|---|---|---|---|---|
| | | | | |

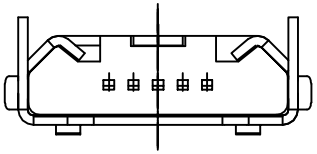

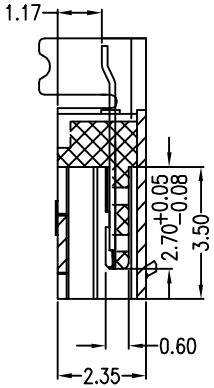


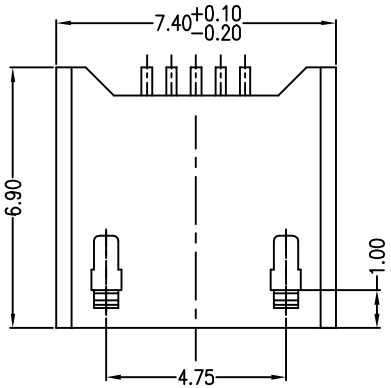


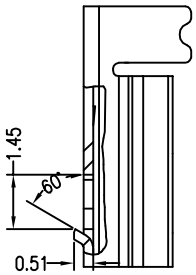


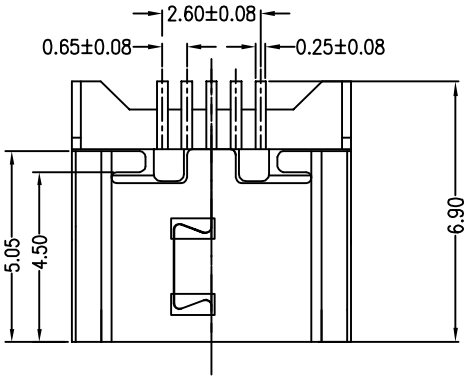


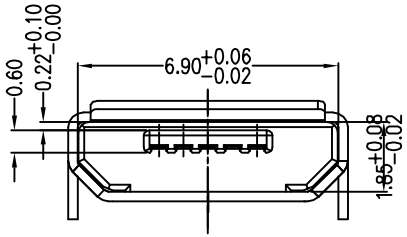


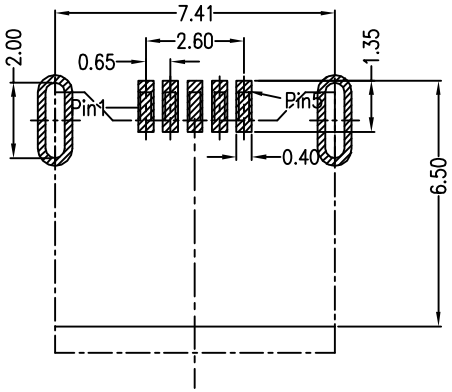


RECOMMANDED PCB LAYOUT

Note:
1.Material:
1.1 Housing: High temperature thermoplastic with g.f,UL94v-0
1.2 Contact: copper alloy,t=0.15mm
1.3 Shell: copper alloy,t=0.25mm
2.Specification:
2.1 Current rating: 1 A Max.
2.2 Dielectric withstanding voltage: 100 V(ac) for 1 min.
2.3 Contact resistance: 50 mW Max.
2.4 Insulation resistance: 100 MW Min.
2.5 Total mating force: 3.57 Kgf Max.
2.6 Total unmating force: 1.0 Kgf Min.0.81~2.05 Kgf Min.after 10000 insertion/extration cycles
2.7 Temperature range: -30°C~80°C

**A 01 S B X X X X X X X 4-149**
① ② ③ ④ ⑤ ⑥ ⑦ ⑧ ⑨ ⑩ ⑪ ⑫ ⑬

① 产品代号 A:成品
② 产品系列 01:micro usb 5pin
③ 产品类别 S:母座
④ 产品类型 B:B TYPE
⑤ 外壳材质 1:C2680R-H
⑥ 外壳电镀 0:素材;1: Ni100u'';2:雾Sn100u'';3:Ni+Au1u''(脚);4:全Au1u''
⑦ 端子材质 4:C5191R-EH 2:C2680R-EH
⑧ 端子电镀 0:素材;1:全Au1u'';2:全Au1.5u'';3:全Au3u'';4:全Au10u''
5:全Au15u'';6:全Au30u'';7:亮Sn+Au1u'';8:亮Sn+Au3u''
A:雾锡+Au1u'';B:雾锡Au1.5u'';C:雾锡Au3u'';D:雾锡Au5u''
⑨ 主体材质 1:LCP
⑩ 主体颜色 B:黑色 W:白色
⑪ 包装方式 1:吸塑管;2:卷带;4:pe袋
⑫ 下板类型 4:贴板式
⑬ 细节流水 149 :Micro usb 5s B Type Smt(贴板式)两只脚插板式无导位插板式

| | | | |
|---|---|---|---|
| PART NO: A01SBXXXXXXX4-149 | | MATERAL: SEE NOTE | 深圳市顺宏康科技有限公司 |
| MODEL NO: XX | | FINSH: SEE NOTE | |
| UNIT: MM | SIZE: A4 | COLOR: SEE NOTE | TITLE: Micro usb 5s B Type Smt(贴板式)两只脚插板式无导位插板式 |
| TOLERANCE UNSPECIFIED | | DR: 夏友红 | |
| .x | 0.25 | CHK: | DWG NO: SHK-20047 / REV: A |
| .xx | 0.15 | | |
| .xxx | 0.10 | APP: | SCALE: 5:1 / DATE: 2012.05.22 |
| Ang. | 2° | | |