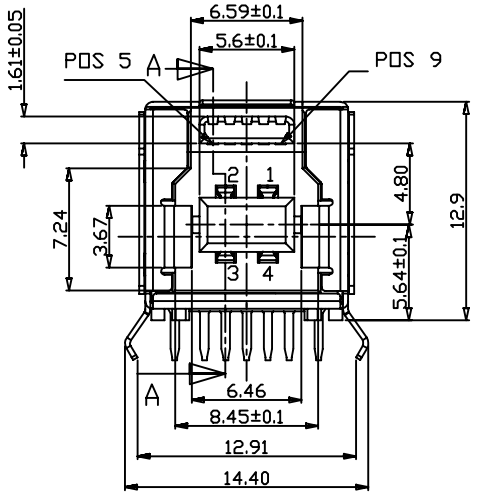

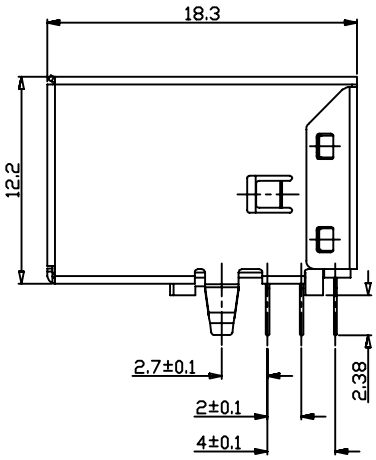

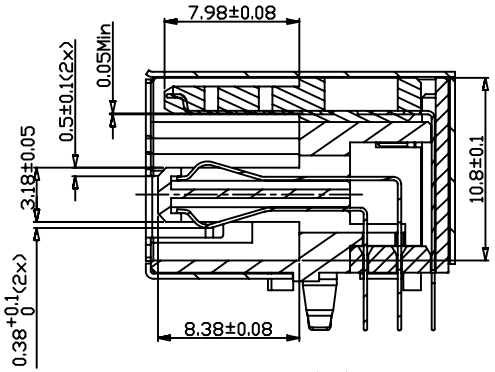

SECTION A-A

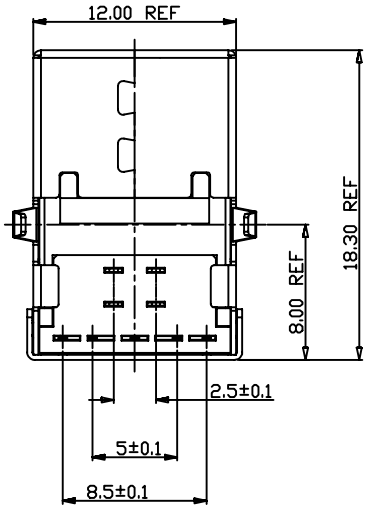

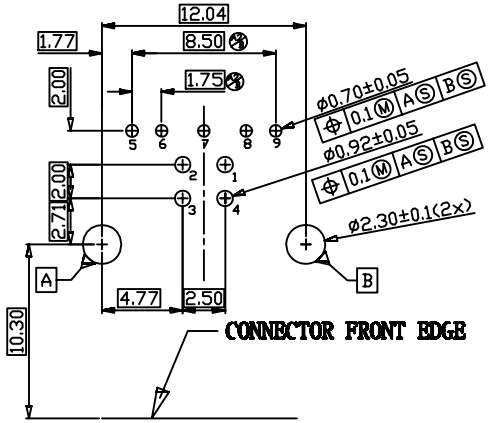

RECOMMANDED PCBA LAYOUT

NOTES:

1. MATERIAL:
   - 1.1 HOUSING: LCP UL94V-0 BLUE
   - 1.2 CONTACT: 1~4PIN,COPPER(T=0.20mm)
     5~9PIN,BRASS(T=0.20mm)
   - 1.3 SHELL: FRONT SHELL,BRASS(T=0.30mm)
     COVER SHELL,SPCC(T=0.20mm)
2. ELECTRICAL CHARACTERISTICS:
   - 2.1 CONTACT RESISTANCE:30mΩ MAX.
   - 2.2 CONTACT CURRENT RATING:1.5A
   - 2.3 DIELECTRIC WITHSTANDING VOLTAGE:500 V R.M.S.
   - 2.4 INSULATION RESISTANCE 1000 MEGOHMS MIN.
   - 2.5 OPERATING TEMPEROTURE:-40°C~85°C
3. MECHANICAL CHARACTERISTICS:
   - 3.1 MATING FORCE:3.57kg MAX.
   - 3.2 UNMATING FORCE:1.02kg MIN.
   - 3.3 DURABILITY:MANDATORY:5000 CYCLES.
4. PLATING
   - 4.1 TERMINAL:GOLD FLASH ALL OVER 40 U"MIN.
     NICKEL AND 1U"MIN TIN ALL OVER 40 U"MIN.
     NICKEL ON SOLDER AREA
   - 4.2 SHELL: 40 U" MIN.NICEL OVER 40U"MIN BRASS.

TOLERANCE UNLESS OTHERWISE SPECIFIED											
.XXX ±0.15									产品名称 PART NAME:	USB BF 3.0 DIP	
.XX ±0.30											
.X ±0.45									料号 PART No:	SHK-30138	C
.X° ±3°											
REV:	DESCRIPTION	REV BY	APPROVED	DATE	MATL:	SEE SPECIFICATION		APPROVED			
					PROJECTION:	THIRD ANGLE PROJECTION		CHECKED			
					UNIT:	SCALE	REV(NO)	SHEET	DRAWED	Hexing	
					mm	1:1	A	1 OF 1	DATE	2011.10.06	

深圳市顺宏康科技有限公司