REV.	ECN.NO.	APPD.
A	/	LXQ

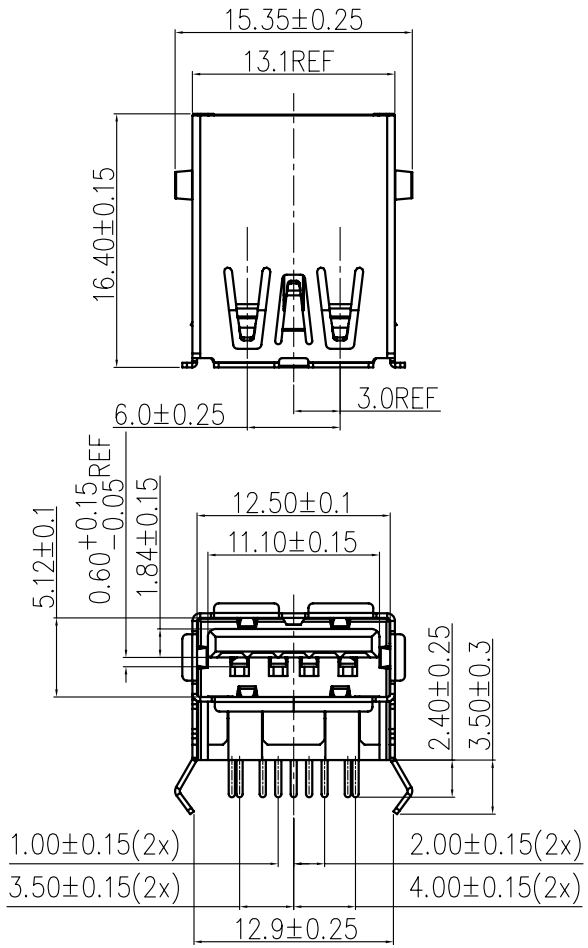

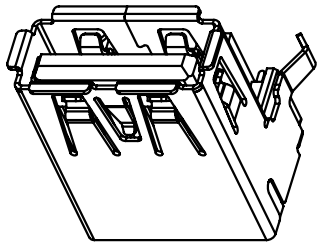

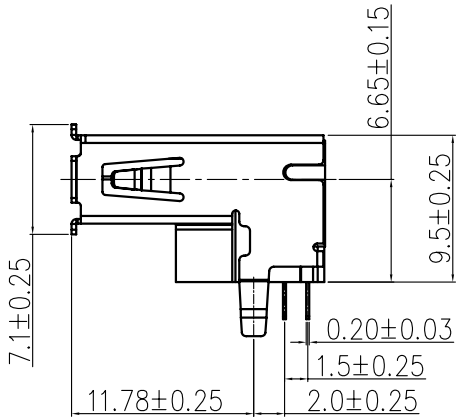

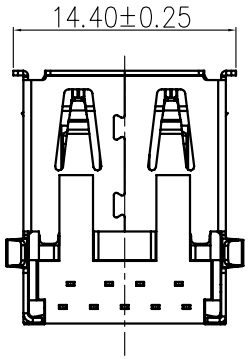

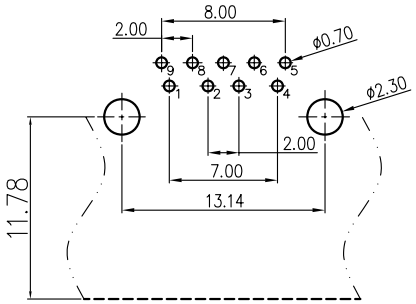

RECOMMANDED PCB
LAYOUT(TOLERANCE±0.05)

NOTES:
1.MATERIAL:
1.1 Housing/Cover:Thermoplastic plastics UL94V-0
1.2 Contact:Copper Alloy
Au 1u" plated on contact area
Tin plating on solder tail
Nickel under plating over all
1.3 Shell:Copper Alloy
50u" Nickel plating over all
2.characteristics:
2.1 Rating Voltage : 30V AC.
2.2 Rating Current:PIN1&PIN4
1.8A MAX Other PINS 0.25A min.
2.3 Contact Resistance:PIN1&PIN4:30 mΩ MAX.
Other PINS: 50 mΩ
2.4 Insulation Resistance:1000 MΩ MIN.
2.5 Withstanding Voltage:DC 1000V between adjacent contacts
2.6 Mating force: 35N MAX
2.7 Extraction force:10N Min
2.8 Life test:1500Cycles MIN.
2.9 Temperature Range: −45℃～+80℃.
The product must be compliance ROHS

U321−162X−XXXXX

- 1:铁壳镀镍
- 5:铜壳镀镍
- 1:半金1u"
- 3:半金3u"
- 5:半金5u"
- 8:半金15u"
- 9:镀全金1u"
- 4:镀全亮锡
- 1:PA66
- 2:PBT
- 6:LCP
- R:RoHS
- 1:RoHS UL94V-0
- 1:吸塑盒
- 2:吸塑管
- 3:载带
- 6:载带+贴麦拉
- 1:黑色
- 2:白色
- 7:蓝色300C

TOLERANCE UNLESS OTHERWISE SPECIFIED						
.XXX ±0.10 .XX ±0.20 .X ±0.30	.X° ±3° .XX° ±2°	深圳市顺宏康科技有限公司				
APPROVED		PART NAME:	USB 3.0 AF 90度加高型9.50			
CHECKED		PART No:	SHK-30141			C
DRAWED	leixianqiang	PROJECTION:	UNIT:	SCALE	SHEET	REV.
DATE	2014.10.10		mm	1:1	1OF1	A