RoHS Compliant

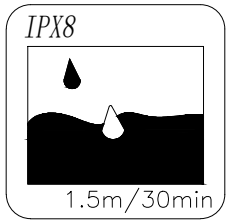

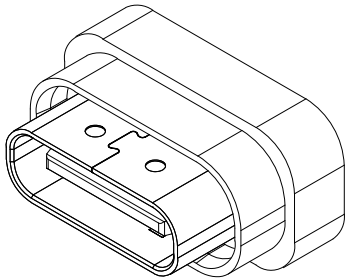

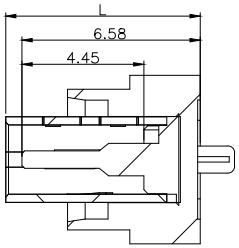

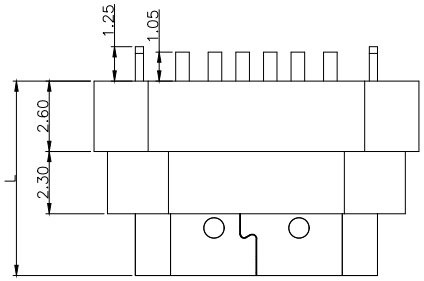

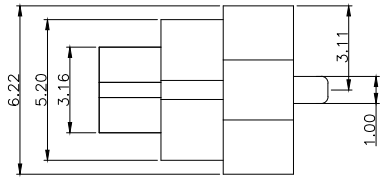

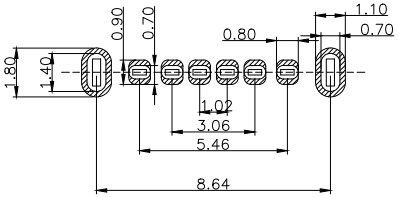

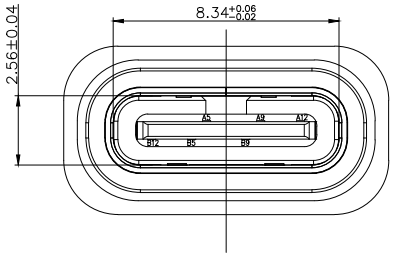

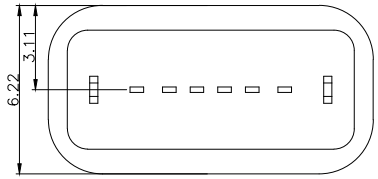

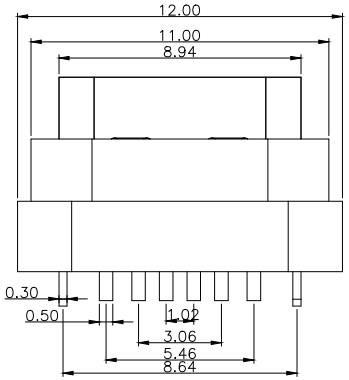

NOTE:
备 注:
1.MATERIAL SPECIFICATION:
1.材料规格:
1−1.HOUSING:HIGH TEMPERATURE RESISTANT PLASTIC,UL94 V−0.
1 - 1. 胶芯材料: 高温塑胶, 防火等级UL94 V-0
1−2.TERMINAL: COPPER ALLOY
1 - 2. 端子材料: 铜合金
1−3.FRONT SHELL: STAINLESS STEEL
1 - 3. 外壳材料: 不锈钢
1−4.MID PLATE: STAINLESS STEEL
2.电镀规格:
2−1.TERMINAL:
2 - 1 . 端子:
Ni 30u" MIN. UNDER PLATED OVER ALL.
镀镍底30u" MIN.
Au PLATED Golden Flash OVER Ni
表面刷金 Golden Flash
2−2.FRONT SHELL:
2 - 2 . 外壳:
Ni 30u" MIN. PLATED OVER ALL.
镀镍底 30u" MIN.
3.MECHANICAL PERFORMANCE,
3.机械性能,
3−1.INSERTION FORCE: 0.5~2.0kgf.
3 - 1. 插入力: 0.5~2.0kgf.
3−2.REMOVAL FORCE: 0.6kgf~2.0kgf.
3 - 2. 拔出力: 0.6kgf~2.0kgf.
3−3.DURABILITY: 5000 CYCLES.
3 - 3. 插拔寿命: 5000次.
4.ELECTRICAL PERFORMANCE,
4.电气性能,
4−1. VOLTAGE RATING: 5.0V DC/AC
4 - 1. 额定电压: 5.0V DC/AC
CURRENT RATING: 3.0A
额定电流: 3.0A
4−2. LLCR: 50mΩ/PIN MAX.
4 - 2 . 接触阻抗: 50mΩ/PIN MAX.
4−3.INSULATION RESISTANCE: 100MΩ MIN
4 - 3. 绝缘阻抗: 100MΩ MIN
4−4.DIELECTRIC WITHSTAND VOLTAGE,AC 100V FOR 1 MINUTE.
4 - 4 . 耐电压: AC 100V FOR 1 MINUTE.
5. ENVIRONMENTAL PERFORMANCE:
5. 环境特性:
OPERATING TEMPERATURE: −25°C~+85°C.
工作温度: -25°C~+85°C.

USB TYPE−C PIN ASSIGNMENTS

PIN NUMBER	SIGNAL NAME	PIN NUMBER	SIGNAL NAME		
A5	CC1	B12	GND	L	L =7.5
A9	VBUS	B5	CC2	L	L =7.2
A12	GND	B9	VBUS	L	L =6.7

MEASURE POINT:
QUADRANT POINT (QP)
TANGENCY POINT (TP)
INTERSECTION POINT (IP)

UNLESS OTHERWISE SPECIFIED, TOLERANCE:

X.	±0.15
X.x	±0.10
X.xx	±0.05
X.xxx	±0.03
ANGLES	±2°

鸿康科技（东莞）有限公司
Hongkang Technology (Dongguan) Co., Ltd

DESIGN: Gu Yi Fei	DATE: 2023.09.18		TITLE: TYPE-C 6PIN立插防水
APPRO:	DATE:		
REV.: X1	SCALE: 1:1	UNIT: mm	
SIZE: A4	SHEET: 1/1		PART NO.: 0514.WPCF.Y2.HK

This document is exclusively owned by Hongkang Electronic Technology Company and shall not be used, in whole or in part, without prior written permission. Email:hkconn@163.com

RoHS Compliant

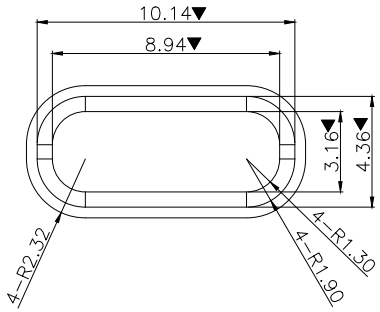

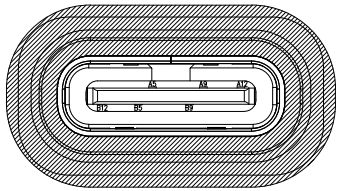

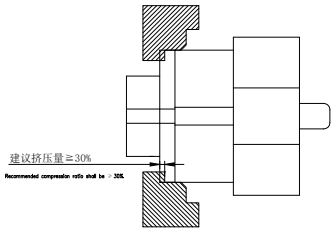

RECOMMENDED SCHEMATIC DRAWING OF CONNECTOR MATCH CHASSIS

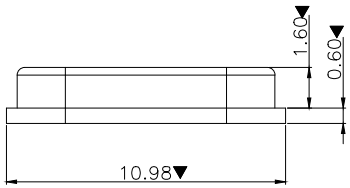

备注 (NOTE)

1. 材质：硅橡胶 SI 60A，黑色无卤，材料要求耐高温 270°

Material: Silicone SI 60A, Black Halogen-Free, Material heat resistance: 270°

2. 品质要求事项：Quality Requirements:

2-1. 不可缺胶，变形，毛边，脏污.

No short shot, deformation, flash or contamination allowed.

2-2. 产品表面不能刮伤，划伤压痕.

No scratch, scuff or indentation on product surface.

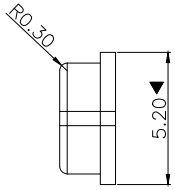

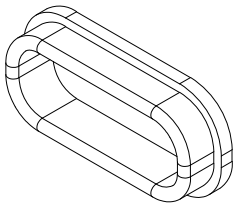

MEASURE POINT: QUADRANT POINT (QP) TANGENCY POINT (TP) INTERSECTION POINT (IP)	鸿康科技（东莞）有限公司 Hongkang Technology (Dongguan) Co., Ltd		
UNLESS OTHERWISE SPECIFIED, TOLERANCE: X. ±0.15; X.x ±0.10; X.xx ±0.05; X.xxx ±0.03; ANGLES ±2°	DESIGN: Gu Yi Fei	DATE: 2023.09.18	TITLE: TYPE-C 6PIN立插防水
	APPRO:	DATE:	
	REV.: X1	SCALE: 1:1	UNIT: mm
	SIZE: A4	SHEET: 1/1	PART NO.: 0514.WPCF.Y2.HK

This document is exclusively owned by Hongkang Electronic Technology Company and shall not be used, in whole or in part, without prior written permission. Email:hkconn@163.com

RoHS Compliant

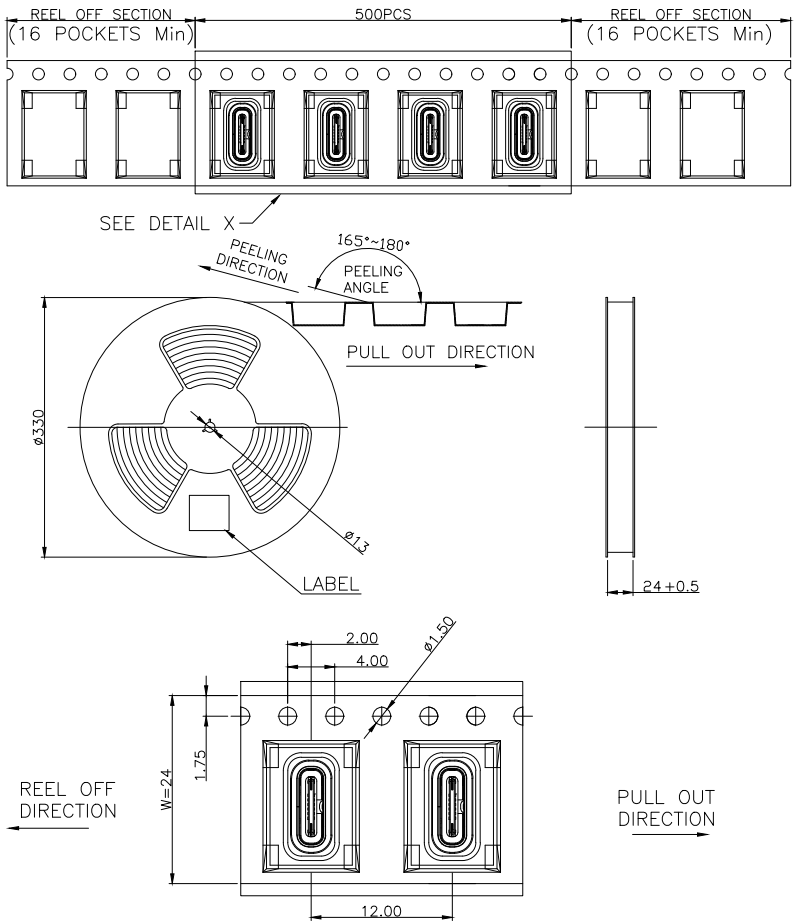

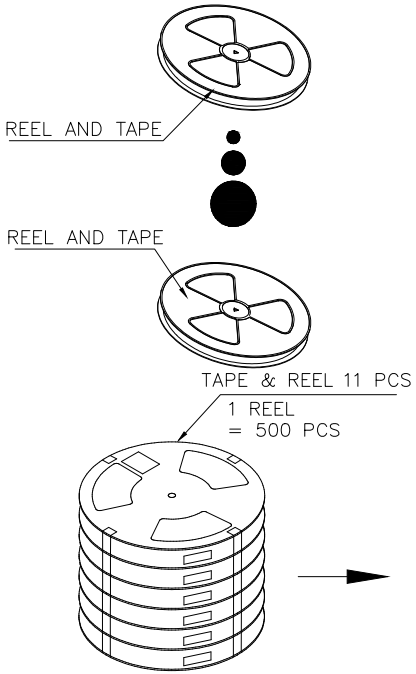

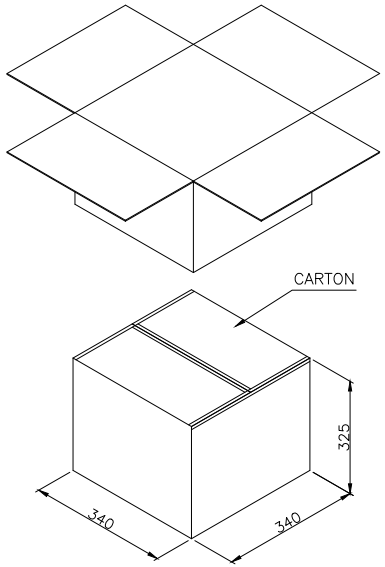

MEASURE POINT: QUADRANT POINT (QP) TANGENCY POINT (TP) INTERSECTION POINT (IP)	鸿康科技（东莞）有限公司 Hongkang Technology (Dongguan) Co., Ltd		
UNLESS OTHERWISE SPECIFIED, TOLERANCE: X. ±0.15; X.x ±0.10; X.xx ±0.05; X.xxx ±0.03; ANGLES ±2°	DESIGN: Gu Yi Fei	DATE: 2023.09.18	TITLE: TYPE-C 6PIN立插防水
	APPRO:	DATE:	
	REV.: X1	SCALE: 1:1	UNIT: mm
	SIZE: A4	SHEET: 1/1	PART NO.: 0514.WPCF.Y2.HK

This document is exclusively owned by Hongkang Electronic Technology Company and shall not be used, in whole or in part, without prior written permission. Email:hkconn@163.com