RoHS Compliant

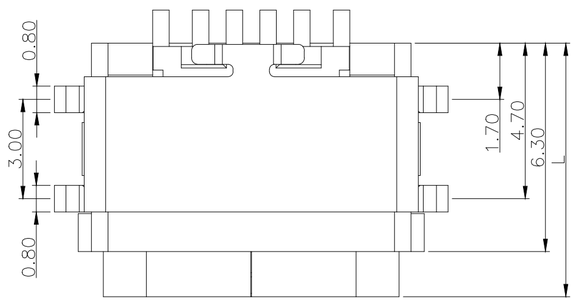

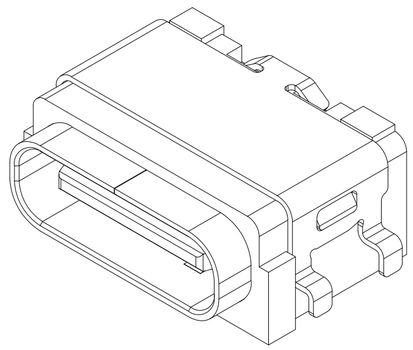

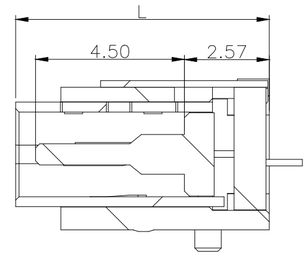

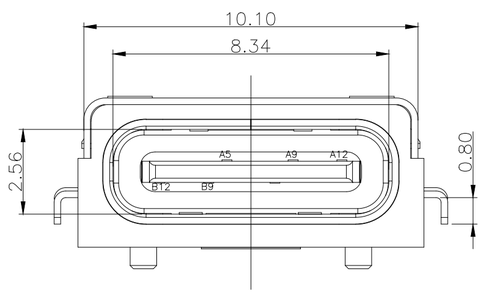

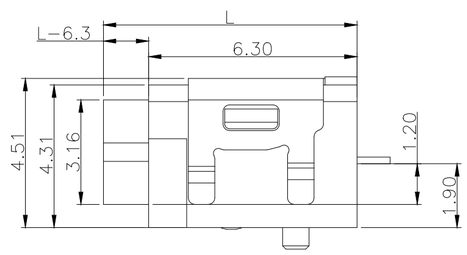

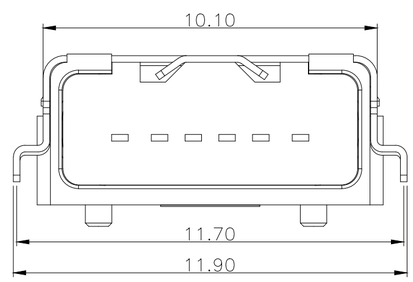

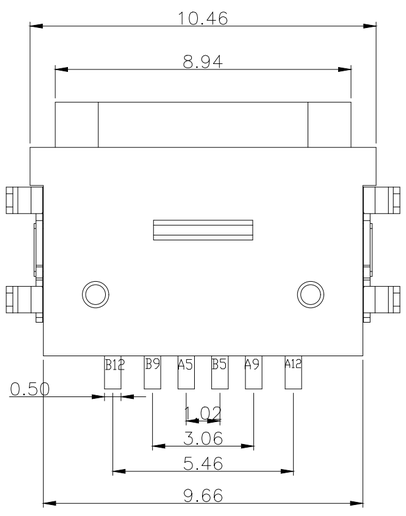

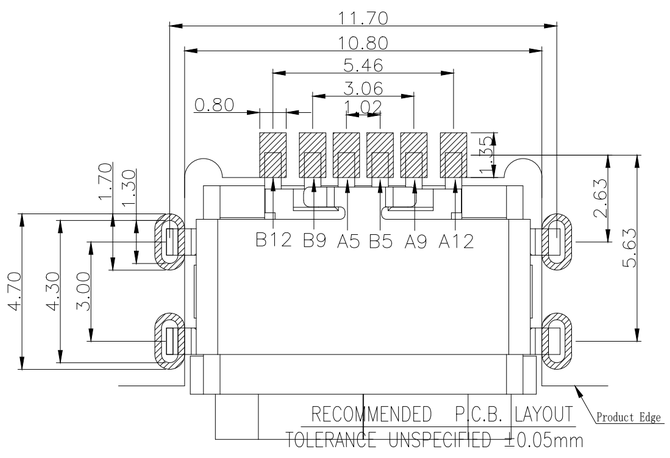

NOTE:
备 注:
1.MATERIAL SPECIFICATION:
1. 材 料 规 格 :
1-1.HOUSING:HIGH TEMPERATURE RESISTANT PLASTIC,UL94 V-0.
1 - 1. 胶芯材料：高温塑胶，防火等级UL94 V-0
1-2.TERMINAL: COPPER ALLOY
1 - 2. 端子材料：铜合金
1-3.FRONT SHELL: STAINLESS STEEL
1 - 3. 外壳材料：不锈钢
1-4.MID PLATE: STAINLESS STEEL
2. 电 镀 规 格:
2-1.TERMINAL:
2 - 1 . 端 子:
Ni 30u" MIN. UNDER PLATED OVER ALL.
镀镍底30u" MIN.
Au PLATED Golden Flash OVER Ni
表面刷金 Golden Flash
2-2.FRONT SHELL:
2 - 2 . 外 壳 :
Ni 30u" MIN. PLATED OVER ALL.
镀镍底 30u" MIN.
3.MECHANICAL PERFORMANCE,
3. 机 械 性 能 ,
3-1.INSERTION FORCE: 0.5~2.0kgf.
3 - 1. 插入力: 0.5~2.0kgf.
3-2.REMOVAL FORCE: 0.6kgf~2.0kgf.
3 - 2. 拔出力: 0.6kgf~2.0kgf.
3-3.DURABILITY: 5000 CYCLES.
3 - 3. 插拔寿命: 5000次.
4.ELECTRICAL PERFORMANCE,
4. 电 气 性 能 ,
4-1. VOLTAGE RATING: 5.0V DC/AC
4 - 1. 额 定 电 压 : 5.0V DC/AC
CURRENT RATING: 2.0A
额 定 电 流 : 2.0A
4-2. LLCR: 50mΩ/PIN MAX.
4 - 2 . 接 触 阻 抗 : 50mΩ/PIN MAX.
4-3.INSULATION RESISTANCE: 100MΩ MIN
4 - 3. 绝 缘 阻 抗 : 100MΩ MIN
4-4.DIELECTRIC WITHSTAND VOLTAGE,AC 100V FOR 1 MINUTE.
4 - 4 . 耐 电 压 : AC 100V FOR 1 MINUTE.
5. ENVIRONMENTAL PERFORMANCE:
5. 环 境 特 性 :
OPERATING TEMPERATURE: -25°C~+85°C.
工 作 温 度 : -25°C~+85°C.

USB TYPE-C PIN ASSIGNMENTS

PIN NUMBER	SIGNAL NAME	PIN NUMBER	SIGNAL NAME		
A5	CC1	B12	GND	L	L =8.0
A9	VBUS	B5	CC2	L	L =7.7
A12	GND	B9	VBUS	L	L =7.2

MEASURE POINT:
QUADRANT POINT (QP)
TANGENCY POINT (TP)
INTERSECTION POINT (IP)

UNLESS OTHERWISE SPECIFIED, TOLERANCE:

X.	±0.15
X.x	±0.10
X.xx	±0.05
X.xxx	±0.03
ANGLES	±2°

鸿康科技（东莞）有限公司
Hongkang Technology (Dongguan) Co., Ltd

DESIGN: Gu Yi Fei	DATE: 2023.09.18		TITLE: TYPE-C 6PIN沉板1.2防水7.2L
APPRO:	DATE:		
REV.: X1	SCALE: 1:1	UNIT: mm	
SIZE: A4	SHEET: 1/1		PART NO.: 0522.WPCF.Y2.HK

This document is exclusively owned by Hongkang Electronic Technology Company and shall not be used, in whole or in part, without prior written permission. Email:hkconn@163.com

RoHS Compliant

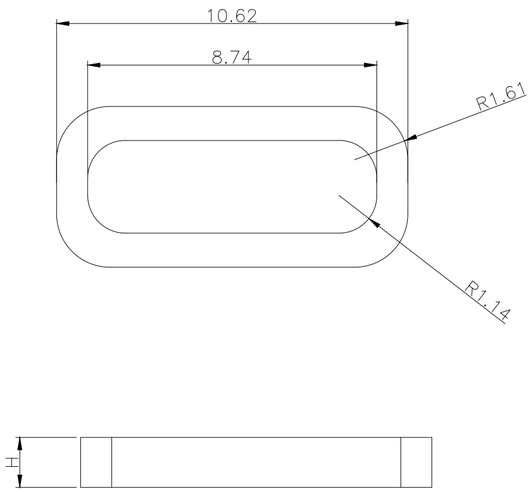

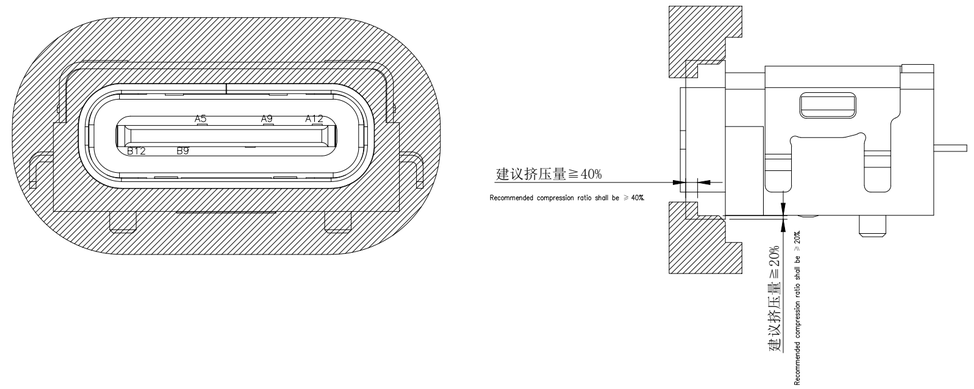

RECOMMENDED SCHEMATIC DRAWING OF CONNECTOR MATCH CHASSIS

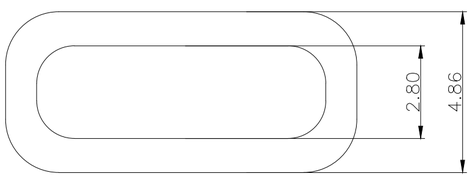

备注 (NOTE)

1. 材质：硅橡胶 SI 60A，黑色无卤，材料要求耐高温 270°

Material: Silicone SI 60A, Black Halogen-Free, Material heat resistance: 270°

2. 品质要求事项：Quality Requirements:

2-1. 不可缺胶，变形，毛边，脏污.

No short shot, deformation, flash or contamination allowed.

2-2. 产品表面不能刮伤，划伤压痕.

No scratch, scuff or indentation on product surface.

USB TYPE-C PIN ASSIGNMENTS

PIN NUMBER	SIGNAL NAME	PIN NUMBER	SIGNAL NAME		
A5	CC1	B12	GND	H	H =0.9
A9	VBUS	B5	CC2	H	H =1.2
A12	GND	B9	VBUS	H	H =1.5

MEASURE POINT:
QUADRANT POINT (QP)
TANGENCY POINT (TP)
INTERSECTION POINT (IP)

UNLESS OTHERWISE SPECIFIED, TOLERANCE:

X.	±0.15
X.x	±0.10
X.xx	±0.05
X.xxx	±0.03
ANGLES	±2°

鸿康科技（东莞）有限公司
Hongkang Technology (Dongguan) Co., Ltd

DESIGN: Gu Yi Fei	DATE: 2023.09.18		TITLE: TYPE-C 6PIN沉板1.2防水7.2L
APPRO:	DATE:		
REV.: X1	SCALE: 1:1	UNIT: mm	
SIZE: A4	SHEET: 1/1		PART NO.: 0522.WPCF.Y2.HK

This document is exclusively owned by Hongkang Electronic Technology Company and shall not be used, in whole or in part, without prior written permission. Email:hkconn@163.com

RoHS Compliant

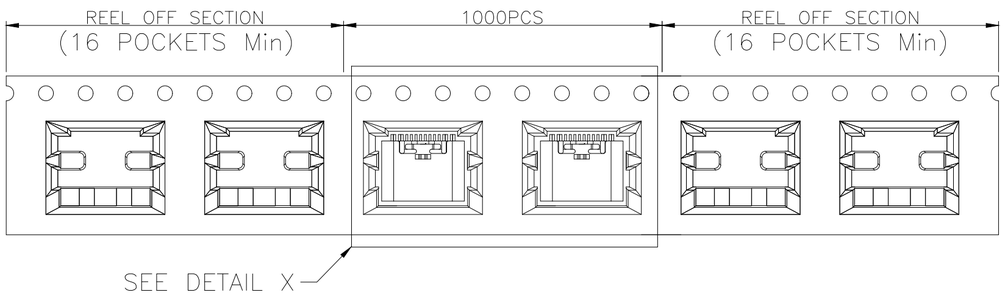

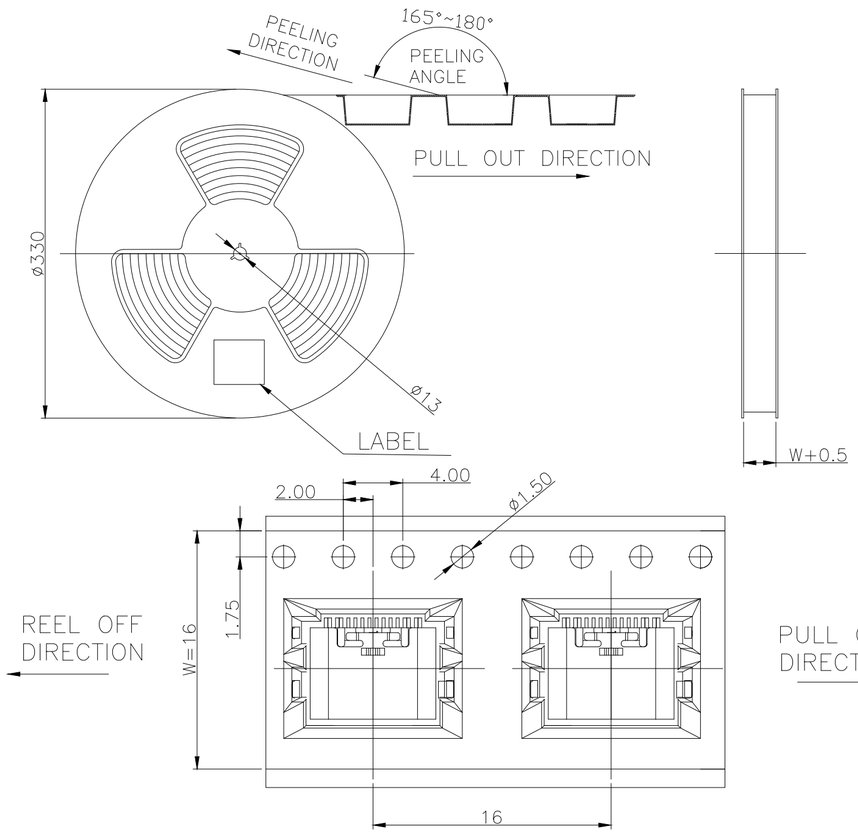

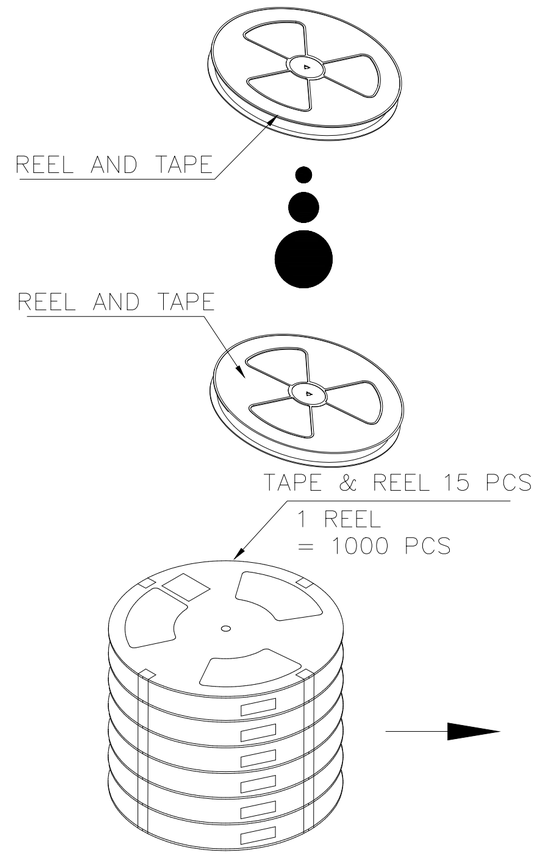

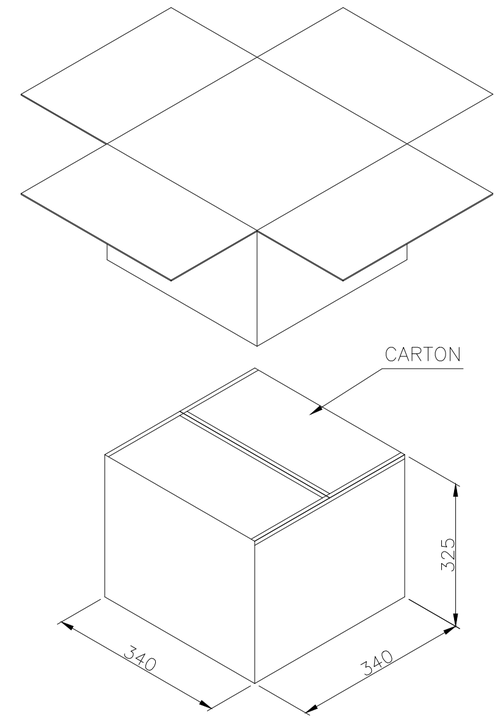

MEASURE POINT: QUADRANT POINT (QP) TANGENCY POINT (TP) INTERSECTION POINT (IP)	鸿康科技（东莞）有限公司 Hongkang Technology (Dongguan) Co., Ltd		
UNLESS OTHERWISE SPECIFIED, TOLERANCE: X. ±0.15 X.x ±0.10 X.xx ±0.05 X.xxx ±0.03 ANGLES ±2°	DESIGN: Gu Yi Fei	DATE: 2023.09.18	TITLE:
	APPRO:	DATE:	TYPE-C 6PIN沉板1.2防水7.2L
	REV.: X1	SCALE: 1:1	UNIT: mm
	SIZE: A4	SHEET: 1/1	PART NO.: 0522.WPCF.Y2.HK

This document is exclusively owned by Hongkang Electronic Technology Company and shall not be used, in whole or in part, without prior written permission. Email:hkconn@163.com