REV.	ECN.NO.	APPD.
A	/	pcy

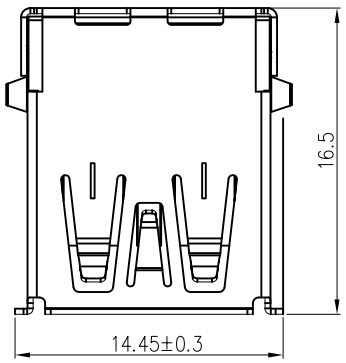

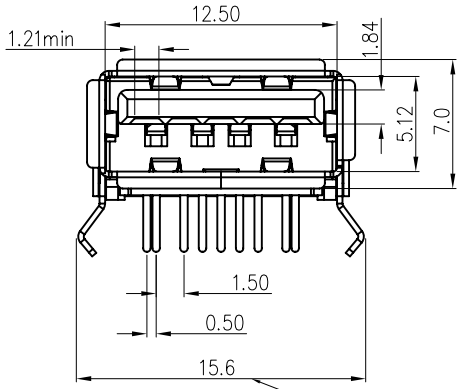

此尺寸以适配为主

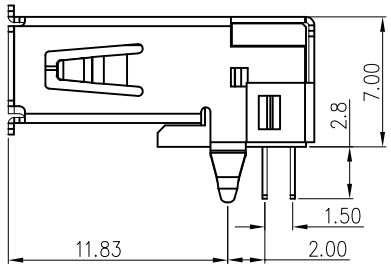

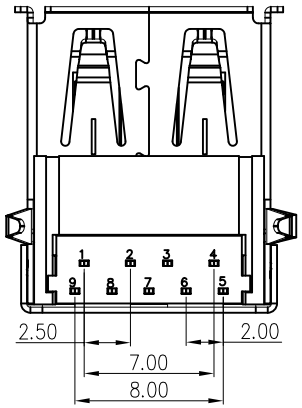

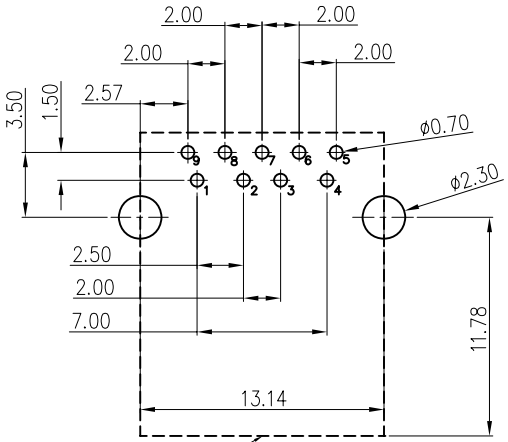

CONNECTOR
FRONT EDGE

Remark:
1.MATERIAL:
1.1 Housing:thermoplastic plastics.
1.2 terminals:Copper Alloy
1.3 Shell:Copper Alloy/SPCC.
2.characteristics:
2.1 Rating Voltage : 30V AC.
2.2 Rating Current:PIN1&PIN4(Vbus&Correponding ground PIN)
1.8A MAX Other PINS 0.25A min.
2.3 Contact Resistance:PIN1&PIN4:30 mΩ MAX. Other PINS: 50 mΩ
2.4 Insulation Resistance:100 MΩ MIN.
2.5 Withstanding Voltage:AC 100V between adjacent contacts
2.6 Mating force: 3.57Kgf MAX(35N MAX)
2.7 Extraction force:1Kgf Min(9.8N Min)
2.8 Life test:1500Cycles MIN.
2.9 Temperature Range: −30℃～+80℃.

U321−012X−XXX0X1

1:Iron alloy Ni plating
5:Copper alloy Ni plating
1:Au 1u"
3:Au 3u"
5:Au 5u"
7:Au 10u'
8:Au 15u"
A:Au 30u"
1:PA66
2:PBT
6:LCP
1:Black
7:Blue 300C
8:Blue 300C−1
C:Blue 300C−2
E:Blue 300C−3
9:Carbon black425C
1:tray
2:Tube
8:Tape&Reel
9:Tape&Reel+Mylar

Pin Number	Signal Name
1	VBUS
2	D−
3	D+
4	GND
5	SSRX−
6	SSRX+
7	GND
8	SSTX−
9	SSTX+
Shell	Shield

TOLERANCE UNLESS OTHERWISE SPECIFIED .XXX ±0.10 .XX ±0.20 .X ±0.30 .X° ±3° .XX° ±2°		深圳市顺宏康科技有限公司				
APPROVED		PART NAME:	USB 3.0 AF 90度			
CHECKED		PART No:	SHK-30133			C
DRAWED	pengchaoyong	PROJECTION:	UNIT:	SCALE	SHEET	REV.
DATE	2014.10.24		mm	1:1	1OF1	A