REV.	ECN NO OR DESCRIPTION	REVISED	DATE
A	PROPOSE ONLY	ERIC	2015.04.13

NOTES:

1) MATERIAL:
   1-1. HOUSING:THERMOPLASTIC,UL94 V-0, FILLED COLOR:BLACK;
   1-2. CONTACT:COPPER ALLOY T=0.15mm
   1-3. SHELL:STAINLESS STEEL T=0.30mm
2) FINISH:
   2-1. CONTACT: Au G/F, PLATING ON CONTACT AREA,
   MATTE PURE Sn 100u" Min. PLATING ON SOLDERTAILS,
   Ni 50u" Min.UNDERPLATING OVER ALL;
   2-2. SHELL: MATTE PURE Sn 50u" Min.OVER ALL,Ni 50u" Min.UNDERPLATING;
3) ELECTRICAL SPECIFICATIONS:
   3-1. VOLTAGE RATING: 100VAC
   3-2. CURRENT RATING: 1.0A
   3-3. INSULATION RESISTANCE: 100MEG.OHM MIN
   3-4. CONTACT RESISTANCE: 50 MILL.OHM MAX
   3-5. OPERATION TEMPERATURE: -25° TO +65°
   3-6. DURABILITY: 10000 CYCLES
   3-7. INSERTION FORCE: 35N MAX.
   3-8. EXTRACTION FORCE: 8N MIN.

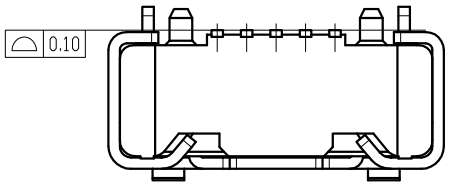

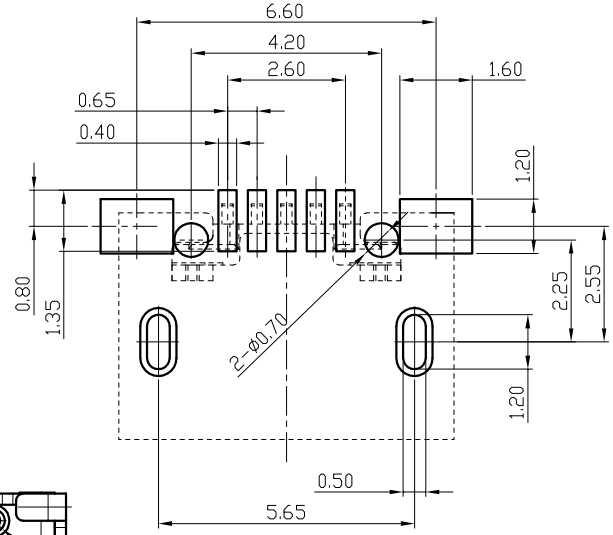

RECOMMEND PCB LAYOUT

GENERAL TOLERANCE ±0.05

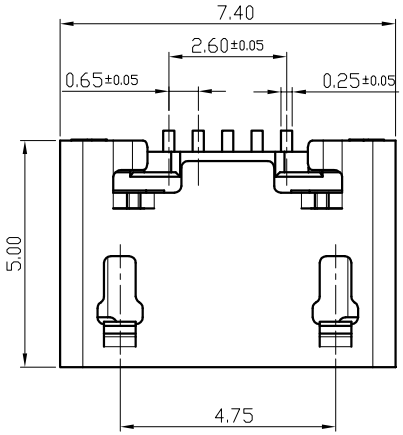

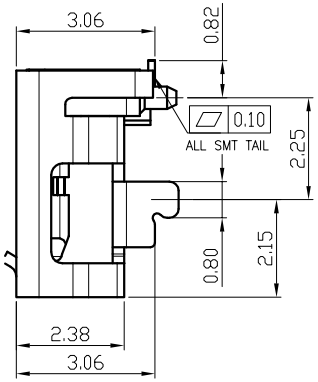

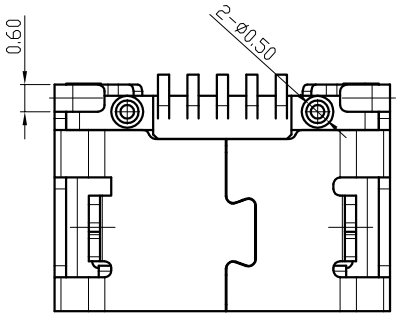

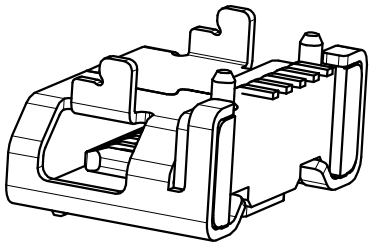

4. PART No.:

MR 1 F - 30 01 05- 41 G

- Micro USB SERIES
- 1=WITH POST
- F=Female
- 30:HEIGHT3.0mm(ON PCB)
- 01=ON PCB
- Pin NO. 05=5Pin
- 41=PRODUCT ORDER
- G=gold flash

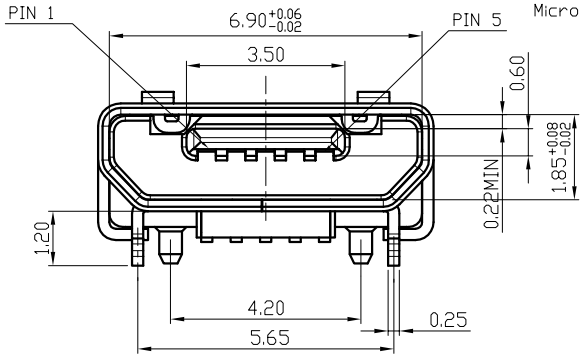

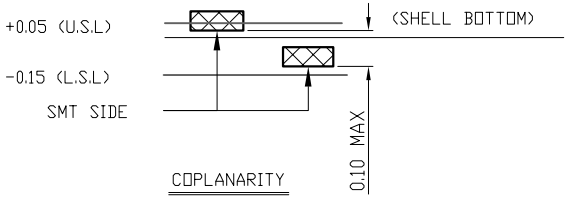

NO.	DESCRIPTION	QT'Y	MATERIAL	NOTE
3	CONTACT	5	COPPER OLLAY	1U" GOLD FLASH PALTING OVER AL
2	HOUSING	1	THERMOPLASTIC	COLOR:BLACK
1	SHELL	1	COPPER OLLAY	N 50u" MATTE TIN 50u"

UNLESS OTHERWISE SPECIFED TOLERANCES

DECIMALS: X :±0.5, X.X :±0.20, X.XX :±0.10

ANGLES: X :±2°, X.X :±1°

深圳市顺宏康科技有限公司

TITLE	Micro USB 5Pin		
DWN	Johnie	PART NO. MRIF-300105-41G	
CHKD	Kevin.d	SCALE:1:1	UNIT: mm
APVD	Simon.Mo	SIZE: A4	SHEET:1OF1 REV: B

CUSTOMER COPY